Photon
Standard / Deluxe
User Manual

DAYMAK

About Daymak

Daymak, a Toronto-based company, incorporated in 2002, is a leading developer and distributor of personal light electric vehicles. Daymak's goal is to reduce the carbon footprint one electric vehicle at a time! Please visit www.daymak.com for more information.

Our electric bicycles represent an energy-efficient and eco-friendly alternative for people who need to get around the city. They greatly increase the practicality of bicycle transportation in urban centres. Costing only a few cents to charge, an e-bike can make city life more convenient and much less expensive.

While there are many new Green technologies that are still in their infancy, electric bicycles have been developing over the last 40 years or more. E-bike technology has been dramatically refined since the introduction of the first custom-conversion bicycles. Today, electric bicycles are a supremely reliable and affordable means of transportation.

Daymak is constantly developing new eco-friendly alternative transportation strategies, led by its own Research and Development department in Toronto, Canada. We are always improving our products. Our innovative in-house engineering and quality testing provide customers with many new kinds of reliable, eco-friendly vehicles, designed to help change the lives of our customers and the world.

Daymak warranties, services, and stocks parts for everything it sells. We support our products.

DAYMAK

Table of Contents

DAYMAK

Introduction

E-Scooter

Riding an electric scooter is a great way to hop around town conveniently and cheaply. E- Scooters represent a natural progression in the development of urban transportation.

Using only small amounts of electricity, e-scooters have the potential to radically reduce the amount of pollution in our cities. As well, they are very quiet, so they do not add to the high levels of noise pollution which we often take for granted. They are easy, and are free to park. They are unobtrusive and highly practical additions to the urban landscape.

E-scooters are also inexpensive. They (currently) require no registration, no insurance, no licence and do not incur parking charges. As well, compared to internal combustion engines, the motors in electric vehicles have fewer moving parts and require far less maintenance.

Your Daymak e-scooter is the result of Daymak's years of experience, the highly trained technical skills of our staff and careful, ongoing design work by our engineers. We hope you enjoy using this product and welcome any feedback that you may have.

New Laws

Most provinces in Canada, most states in the U.S.A, the United Kingdom and many European countries have new laws that permit cyclists to use electric motors to assist the regular operation of bicycles or scooters. Please check with your provincial or state government to learn about your local laws.

Liability

Daymak does not assume any liability for damages, loss of profits, or claims from third parties due to improper use of this product. Daymak does not assume any liability for damages due to problems with the product resulting from service by a third party that is not certified by Daymak.

The information in this guide may be subject to change without notice. For the latest information available, please contact your local Daymak dealer or visit our website.

We have taken all possible measures to ensure the accuracy and completeness of the information in this guide. However, if you do find anything missing, incomplete or wrong, do not hesitate to contact us.

Scooter Part Diagrams

Diagram 1: The Photon Electric Scooter

This diagram illustrates the various parts of your electric scooter. Please note that many of these parts are not user-serviceable and should be repaired only by trained professionals. This is especially true of the electrical systems and the mechanical components.

Photon Standard

1. Throttle
2. Handlebar
3. Brake Lever
4. USB Port
5. Steering column
6. Quick-Release folding mechanism
7. Front Tire
8. Solar Panel
9. Floor Panel
10. Kickstand
11. Motor
12. Speakers

Photon Deluxe

1. Throttle
2. Handlebar
3. Phone Holder
4. Brake Lever
5. USB Port
6. LED Light
7. Steering Column
8. Quick-Release folding mechanism
9. Front Tire
10. Shocks
11. Solar Panel
12. Floor Panel
13. Kickstand
14. Motor
15. Speakers

Riding Instructions

This guide assumes that you already know how to ride a standard kick scooter. Before you try to ride an electric kick scooter, you should be very familiar with controlling and operating a kick scooter.

Important Notes

- Your scooter will operate optimally on smooth, flat terrains. If so inclined, you can assist the electric kick scooter by push kicking, similar to a traditional kick scooter.
- Never ride the scooter on busy streets or roads. Check local ordinances where rid ing is permissible.
- The minimum age recommended for riders is 7 years old and up.
- Always wear an approved safety helmet when riding. Stay safe.
- Wear shoes when riding. Never go barefoot.
- Avoid riding on gravel, sand, grass, slick or wet surfaces. The electric kick scooter is designed to be used on smooth, dry surfaces.
- Never ride the scooter over curbs or jumps. The scooter is not designed to sustain vibration from tall heights. The retailer, distrbutor, importer, or manufacturer will NOT be held responsible for any injuries or damages that occur from recklessness.
- Once the ON switch located near the floor panel is engaged, the motor is at full power. Be prepared.
- The brake is designed to control speed and stop the electric kick scooter.
- Never ride the scooter with more than one person.
- Keep hands, feet, hair and shoestrings away from moving parts.
- Familiarize yourself with the scooter and tighten all screws before use.
- Store batteries at room temperature.

Inspecting your Electric Scooter

Always inspect your scooter before you ride it, to make sure its safety features are operating properly. Many accidents can be avoided with routine inspections. Once you are comfortable with your scooter, you will be able to detect small changes in the way it feels. If anything changes between uses, make sure to have it properly examined. Also, be sure to listen for changes in the sounds your e-bike makes over time. Any mechanical or power issues may have effects on the sounds the scooter makes.

Holding the Handlebars

As with a normal bicycle or scooter, place your fingers over the brake levers, using the palms of your hand and your thumbs to wrap around and under the handlegrips. Doing this allows you to activate the brakes easily, by squeezing your hand, in case you have to stop quickly. This is the safe way to control your electric scooter.

Turning your E-scooter On and Off

To turn on your scooter, locate the ON/ OFF switch near the rear wheel, near the motor. Once turned on, the motor will be active and all systems are functional. Adversely, turning the switch to the off position turns all systems off. The provided remote has a lock button to seize the throttle function while the scooter is turned on.

Warning

When you activate the e-scooter, the electrical system becomes live. Do not try to affect changes to it (such as removing the battery or repairing electrical components) while activated. Turn the scooter off before you attempt to access any of the electrical components. Also, the battery carries a significant electric charge and can injure people if not treated properly and with respect.

Accelerating and Decelerating

The throttle is found on the right-side hand grip on the handlebars. Turn the grip forward (towards you) to accelerate. To decelerate, release the grip (turn it away from you). Don't over-rotate the accelerator, as this could damage the battery and electrical components.

Warning

Do not activate the accelerator until you are prepared to take off. It is advised to always kick push the scooter to assist the motor in its initial take off. Doing so prolongs the life of the motor.

Brakes

Your scooter has a hand-operated brake located on the left hand side. It is connected to the rear wheel. Squeeze the lever to activate the brake.

When the brakes are activated, the power to the engine is automatically turned off, until you release the brakes. This allows you to stop safely. The rear brakes are pressure sensitive. This means that the harder the brake lever is squeezed, the more friction is applied to the brake wheel.

Safety Tips

- When you are traveling in wet weather, water may cause your brakes to function less efficiently because it reduces friction between the brake pads and the wheels. Take care to slow down and give yourself more room to stop or slow if necessary.

- It is a good idea to have your brakes and brake pads checked regularly. The brake pads will eventually wear down through friction, and after significant use will have to be replaced.

Lights

The Photon Deluxe includes an external LED light attached to the steering column. The mount can be adjusted to any height on the steering column - simply loosen the screw, adjust the height, and re-tighten. The LED light has external batteries that are not attached to the Photon Deluxe main battery. Using the LED light at night is ideal for illuminating pathways or to further increase visibility.

Range and Speed

When fully charged, the scooter will cover approximately 10km on level ground with a 70kg rider. The top speed is approximately 15km/h with a 100 kg rider on level ground and calm winds. Please note that these figures are estimates only, and they may vary depending on terrain, wind conditions, and the weight of the rider.

Steering Adjustment

You will need to periodically check the steering adjustment nuts for tightness. This can be adjusted by turning nut clockwise and locking the hex nut with a wrench.

Charging your Scooter

In order to prevent overcharging the battery for your scooter, follow the chart below. Please note that power use depend on the rider and recommended time for charging are averages.

SCOOTER USE TIME (BATTERY DISCHARGE TIME)	CHARGING TIME
0 - 20 minutes	4 - 6 hours
20 - 30 minutes	6 - 8 hours
30+ minutes	8 - 10 hours

Locate the charger socket beneath the floor panel near the right side (SEE FIGURE1). Plug the charger into the charger socket, then plug the other end into a standard 110/220v wall outlet. It is advised to charge your scooter only when the power is turned off.

FIGURE1

Removable Floor Panel

The floor panel is removable to gain access to the batteries. Simply remove four screws with a Phillips screw driver (SEE FIGURE2) and lift the platform. Take care not to sever or damage any wired connections from the solar panel.

FIGURE2

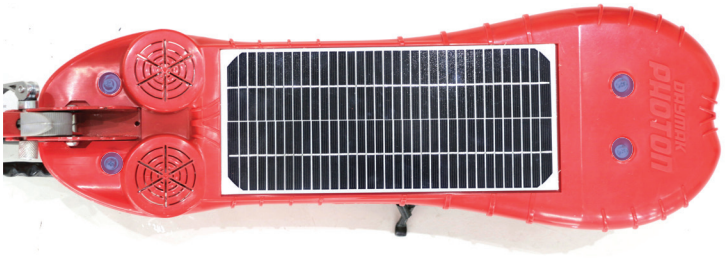

REMOVE SCREWS WITH PHILLIPS SCREWDRIVER

Solar Panels

Avoid placing excessive weight on the solar panels - any cracks, scratches or scuffs on the tempered glass covering the solar panel affects light harnessing efficaciency. For optimal use of the solar panel, place the scooter in an area without obstructions from direct sunlight. The solar panel on the Photon has an output of 28V 0.23A, or an equivalent of 6.4W. Please note that these figures are based on theoretical maximums and ideal weather conditions.

Warning

Avoid placing excessive weight on the solar panels - any cracks, scratches or scuffs on the tempered glass covering the solar panel affects light harnessing efficaciency. For optimal use of the solar panel, place the scooter in an area without obstructions from direct sunlight.

Drive Belt Adjustment and Replacement

Periodic adjustment of the drive belt is required. The belt will become loose after hours of operation. When it does, the belt will make a popping noise when accelerating. When this occurs, you must tighten the drive belt. To do this, loosen the rear axle nuts and rotate the belt adjuster disc equally (SEE FIGURE3). Remove the belt cover, tighten axle nuts and check the belt tension.

FIGURE3-UNDERSIDE VIEW

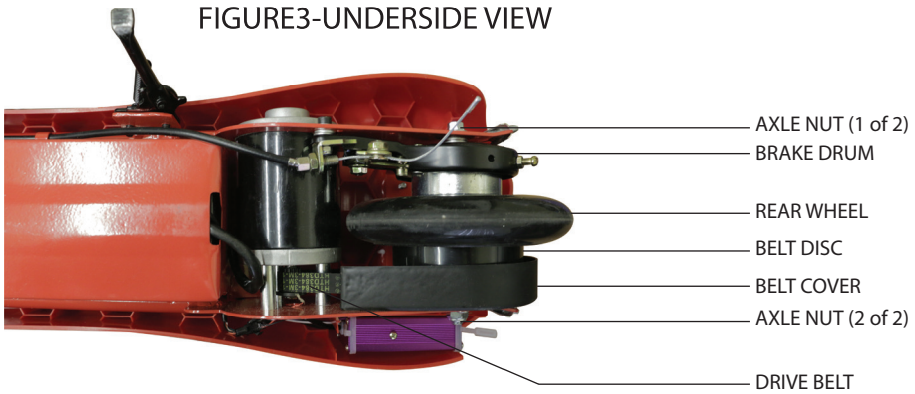

To realign the drive belt, flip the scooter upside down on a sturdy surface, and determine the direction of the drive belt. Remove the belt cover. Move the rear wheel slightly left or right to realign the belt. Do this by first loosening the axle nuts slightly and rotate the belt adjuster discs. Tighten the axle nuts and check alignment by engaging the motor. Recheck after riding and readjust if necessary.

Folding the Steering Column

Your scooter is shipped in the folded and locked position. To unfold, lift the quick release handle near the bottom of the steering column, then bring the steering column to an upright position until the rod snaps in place securely (SEE FIGURE4).

FIGURE4

Battery Care

Store the scooter and charge the batteries at a temperature between 10°C and 35°C. The higher the temperature, the faster the batteries will discharge. Try to keep the batteries charged. Inspect them occasionally and keep terminals clean and connections tight.

Handle your batteries and charger with care. DO NOT OVERCHARGE. See the charging times chart.

FM Radio / Bluetooth and Remote Functions

If the PLAY/MODE button is pressed on the provided remote, by default the built-in radio should turn on. To change radio stations, press the |<<< or >>>|. To turn the volume up or down, press and hold |<<< (it is also the VOL-) or >>>| (for VOL+). To activate the Bluetooth, press and hold the PLAY/MODE button to toggle between radio functionality and USB recognition. Plug in the Bluetooth dongle (SEE FIGURE5). Ensure that the radio is not playing to confirm the USB will recognize the dongle. A chime sound should denote that the BLUETOOTH is activated. Make sure your bluetooth device is connected to BT_DONGLE, and the sound output should come out from the speakers. To charge mobile devices, the mode should be set to BLUETOOTH/USB (the radio should be off and not playing). Simply plug in any USB device on the port.

FIGURE5 - BLUETOOTH DONGLE

Alarm

The alarm can be turned on and off using the alarm on/off button. A recording should indicate if the alarm is turned on or turned off.

TROUBLESHOOTING GUIDE

PROBLEM	POSSIBLE CAUSE	SOLUTION
Motor does not start.	1. Batteries are not connected 2. Batteries are drained 3. Electrical fault	1. Check connections 2. Charge battery 3. Check all wired connections
Rear wheel doesn't turn.	1. Broken drive belt 2. Misaligned drive belt 3. Motor problem	1. Release throttle and wait a few minutes to cool 2. Rider can push kick to assist motor.
Insufficient range.	1. Batteries not fully charged 2. Hilly terrain 3. Cold batteries 4. Misaligned drive belt 5. Damaged or old batteries	1. Charge batteries 2. Push kick more often 3. Warm the batteries 4. Tighten drive belt 5. Replace batteries

TECHNICAL SPECIFICATIONS

SPECIFICATION	PHOTON STANDARD	PHOTON DELUXE
MOTOR	100W	100W
BATTERY TYPE	SEALED LEAD ACID	SEALED LEAD ACID
BATTERY	24V 4.5AH	24V 4.5AH
BATTERY LIFE	300 CYCLES	300 CYCLES
SOLAR PANEL SIZE	300mmx130mm	300mmx130mm
SOLAR OUTPUT	28V~0.23A (~6.4W)	28V~0.23A (~6.4W)
CHARGER INPUT	AC 120V 60Hz 18W	AC 120V 60Hz 18W
CHARGING TIME	4-6 HOURS	4-6 HOURS
MAX SPEED	UP TO 15KM/H (9.3MPH)	UP TO 15KM/H (9.3MPH)
RANGE	10KM (6.2MI)	10KM (6.2MI)
MAX LOAD	UP TO 100KG (220LB)	UP TO 100KG (220LB)
GROSS WEIGHT	17KG (37.5LB)	17KG (37.5LB)
DIMENSIONS	74.5X255X30cm (29”x100”x12”)	74.5X255X30cm (29”x100”x12”)
SOLAR CHARGING TIME	17 HOURS UNDER NATURAL LIGHT	17 HOURS UNDER NATURAL LIGHT
REMOTE CONTROL	ALARM, MP3, FM RADIO	ALARM, MP3, FM RADIO
SPEAKERS	1W WATERPROOF, STEREO	1W WATERPROOF, STEREO
MULTIMEDIA INPUT	1USB, 1 MICRO SD, BLUETOOTH	1USB, 1 MICRO SD, BLUETOOTH
POWER OUTPUT	USB CHARGING PORT	USB CHARGING PORT
AGES	FROM 7-77	FROM 7-77
MOUNT	--	ADJUSTABLE PHONE HOLDER
LIGHTS	--	LED HEADLIGHT
SHOCKS	--	FRONT SHOCKS
TIRES	--	AIR TIRE